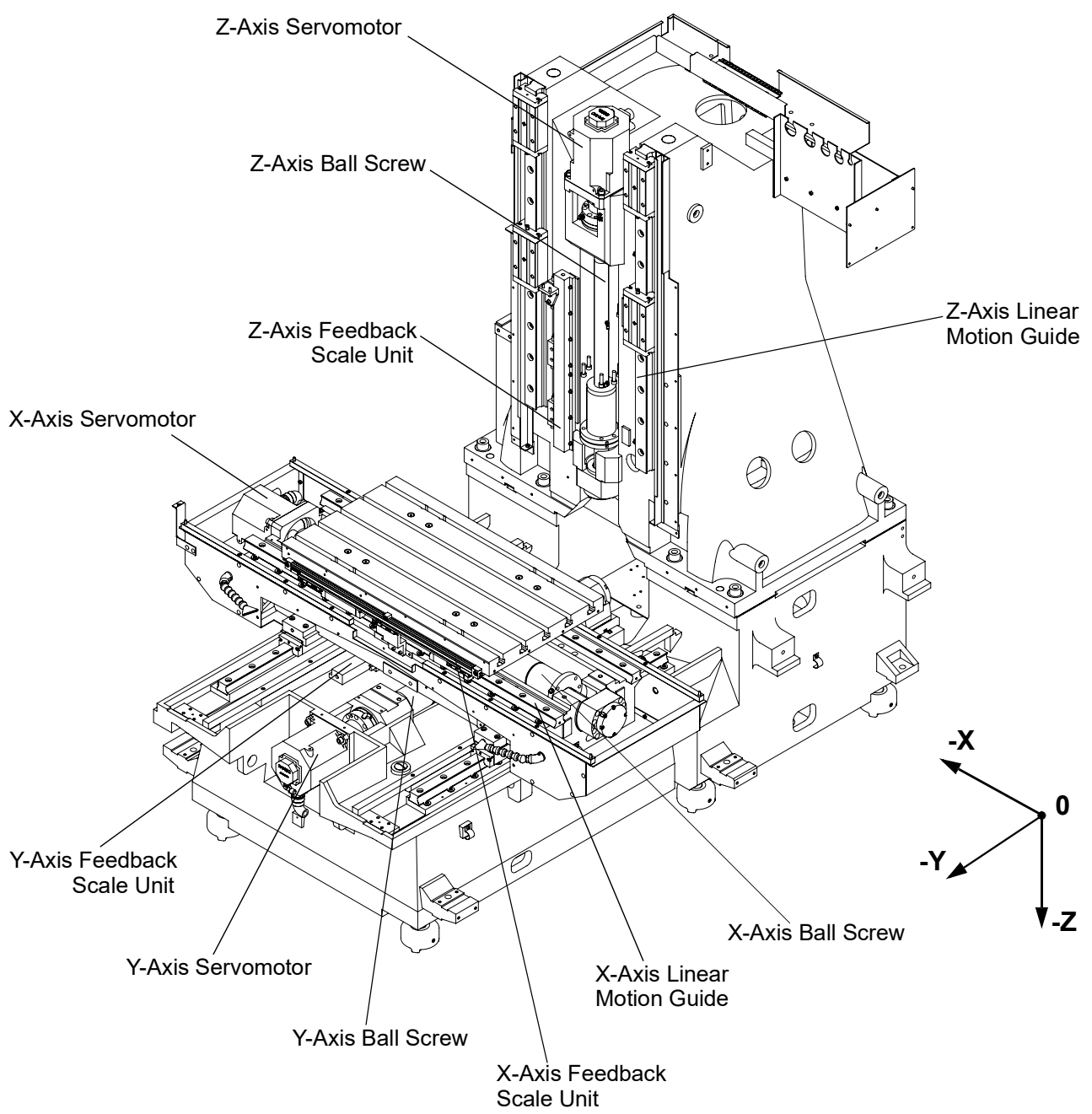
Z-Axis Servomotor
Z-Axis Ball Screw
Z-Axis Feedback Scale Unit
Z-Axis Linear Motion Guide
X-Axis Servomotor
Y-Axis Feedback Scale Unit
Y-Axis Servomotor
Y-Axis Ball Screw
X-Axis Feedback Scale Unit
X-Axis Linear Motion Guide
X-Axis Ball Screw
-X
0
-Y
-Z